Product datasheet

Specifications

Green Premium™

circuit breaker EasyPact CVS100BS, 25 kA at 415 VAC, 63 A rating thermal magnetic TM-D trip unit, 3P 3d

LV510936

Main

Range	EasyPact
Range of product	EasyPact CVS100...160
Product name	EasyPact CVS
Device short name	CVS100BS
Product or component type	Circuit breaker
Device application	Distribution
poles description	3P
Protected poles description	3D
Earth leakage protection (Vigi add on)	Without
[In] rated current	63 A at 40 °C
network type	AC
Suitability for isolation	Yes
Utilisation category	Category A
[Icu] Breaking capacity	25 kA Icu at 440 V AC 50/60 Hz conforming to IEC 60947-2 25 kA Icu at 415 V AC 50/60 Hz conforming to IEC 60947-2 50 kA Icu at 200/240 V AC 50/60 Hz conforming to IEC 60947-2 25 kA Icu at 380/400 V AC 50/60 Hz conforming to IEC 60947-2
Trip unit name	TM-D
Trip unit technology	Thermal-magnetic
Trip unit rating	63 A at 40 °C
Protection type	Instantaneous short-circuit protection Overload protection (long time)

Complementary

[Uimp] rated impulse withstand voltage	8 kV conforming to EN/IEC 60947-2
Network frequency	50/60 Hz
Breaking capacity code	BS
[Ics] rated service breaking capacity	25 kA at 200/240 V AC 50/60 Hz conforming to IEC 60947-2 17 kA at 380/400 V AC 50/60 Hz conforming to IEC 60947-2
Mechanical durability	13000 cycles
Electrical durability	4000 cycles 415 V In conforming to IEC 60947-2
Control type	Toggle
Thermal protection adjustment range	44.1…63 A

Disclaimer: This documentation is not intended as a substitute for and is not to be used for determining suitability or reliability of these products for specific user applications

Long time pick-up adjustment type Ir	Adjustable
Long time pick-up adjustment range	0.7...1 x In
Long time delay adjustment type	Fixed
Instantaneous pick-up adjustment type Ii	Fixed
instantaneous pick-up adjustment range	500 A
Contact position indicator	Yes
Mounting support	Backplate
Mounting mode	Fixed
Upside connection	Front
downside connection	Front
Connections - terminals	Screw connection
Connection pitch	35 mm
Compatibility code	CVS100
Width	75 mm
Depth	60 mm
Height	130 mm
Net weight	0.78 kg

Environment

Standards	IEC 60947-2
Product certifications	GOST CCC CCS
Electrical shock protection class	Class II
Pollution degree	3 conforming to IEC 60664-1
IP degree of protection	IP40
Ambient air temperature for operation	-25…70 °C
Ambient air temperature for storage	-50…85 °C

Packing Units

Unit Type of Package 1	PCE
Number of Units in Package 1	1
Package 1 Height	9.5 cm
Package 1 Width	8.0 cm
Package 1 Length	14.0 cm
Package 1 Weight	826.0 g
Unit Type of Package 2	S02
Number of Units in Package 2	12
Package 2 Height	15.0 cm
Package 2 Width	30.0 cm
Package 2 Length	40.0 cm

Package 2 Weight	10.15 kg
Unit Type of Package 3	PAL
Number of Units in Package 3	384
Package 3 Height	80.0 cm
Package 3 Width	120.0 cm
Package 3 Length	384.0 cm
Package 3 Weight	299.52 kg

Sustainability

Green Premium™ label is Schneider Electric's commitment to delivering products with best-in-class environmental performance. Green Premium promises compliance with the latest regulations, transparency on environmental impacts, as well as circular and low-CO_2 products.

Guide to assessing product sustainability is a white paper that clarifies global eco-label standards and how to interpret environmental declarations.

Learn more about Green Premium >

Guide to assess a product's sustainability >

Transparency RoHS/REACh

Well-being performance

Mercury Free

Rohs Exemption Information	Yes

Certifications & Standards

Reach Regulation	REACh Declaration
Eu Rohs Directive	Compliant with Exemptions
China Rohs Regulation	China RoHS declaration Product out of China RoHS scope. Substance declaration for your information
Environmental Disclosure	Product Environmental Profile
Weee	The product must be disposed on European Union markets following specific waste collection and never end up in rubbish bins
Circularity Profile	No need of specific recycling operations Circularity Profile

Dimensions Drawings

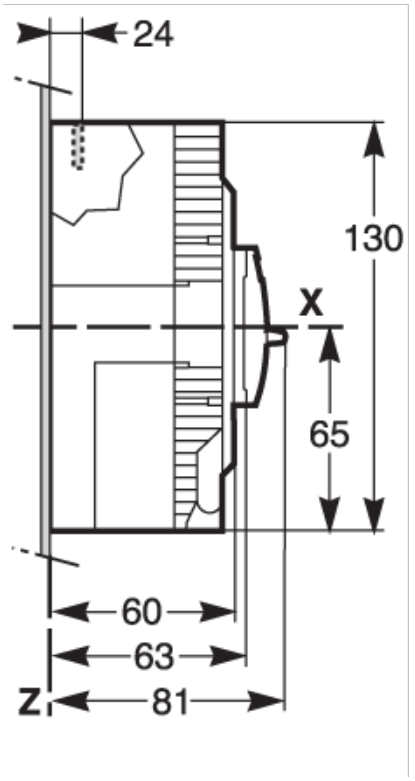

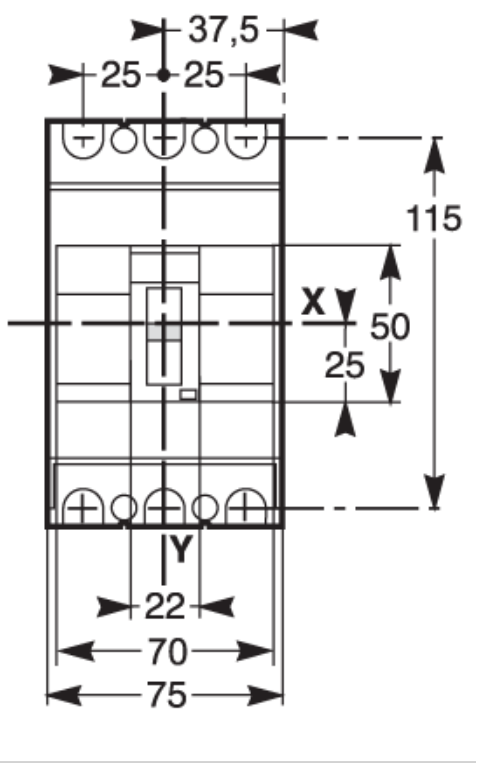

Assembly

3P

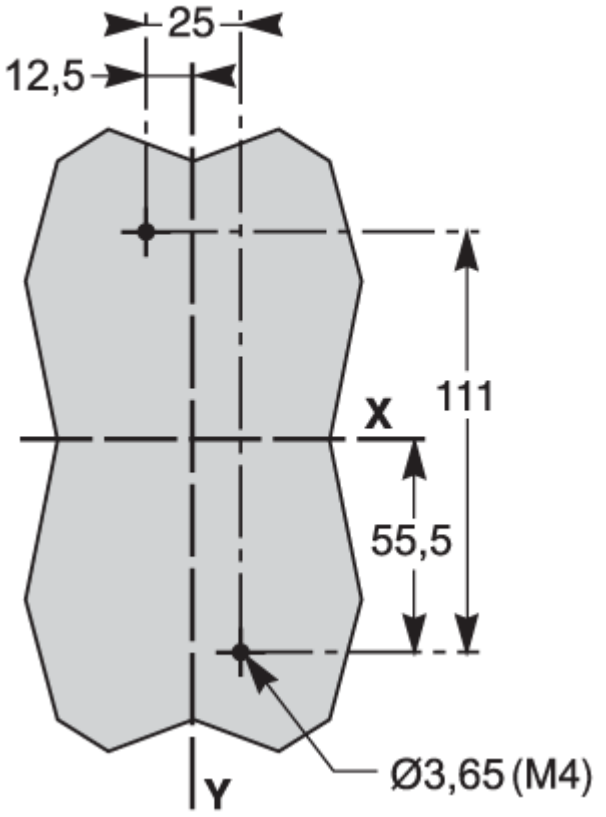

Performance Curves
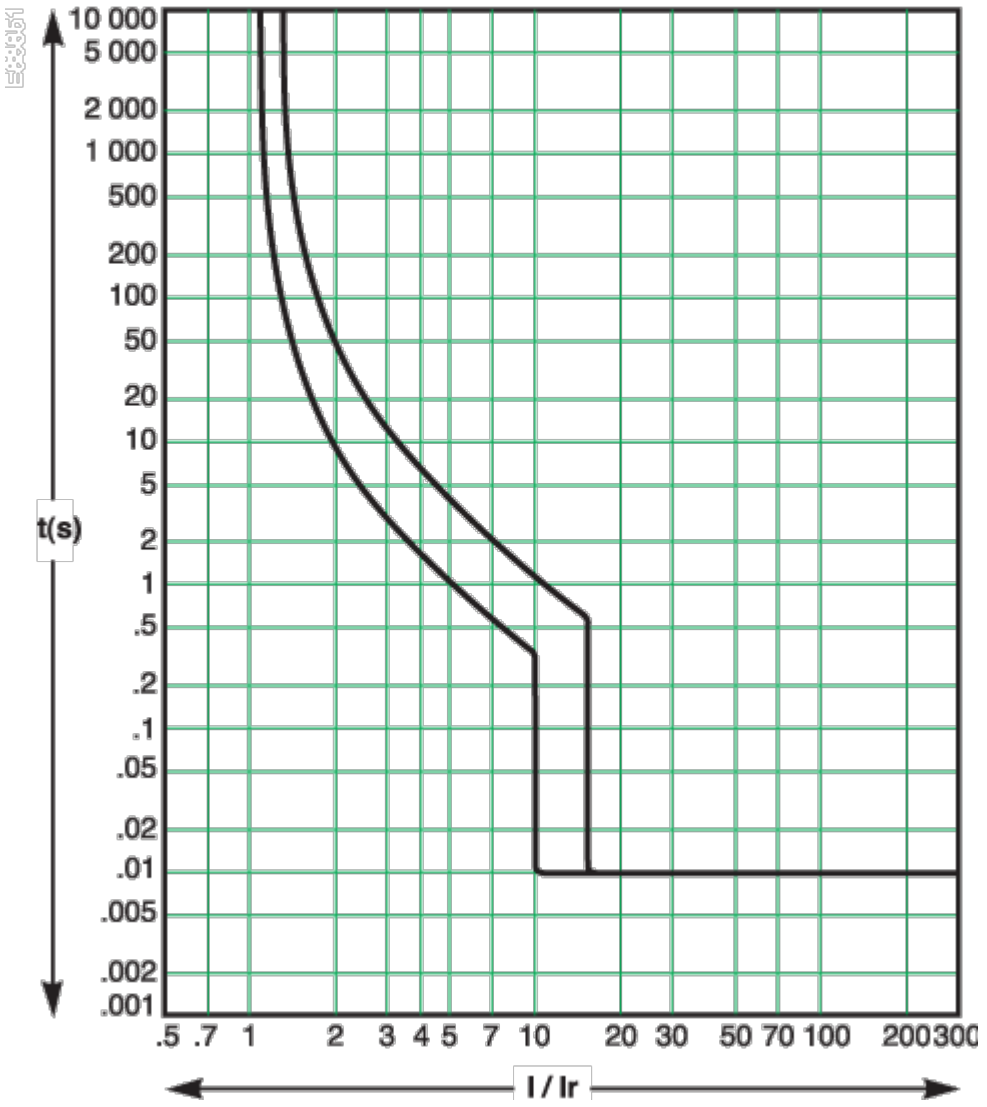
63 A